ГЕК.КОН

Сделано в России, Ростов-на-Дону


OSCILLATORS
WAVEFOR
GLIDE
OSC 2
ATTACK
WIDT
OSC 1
TUNE
MODULATOR
OSC
AMP
PWM
ARM
LFO ROUTE
DEPTH
RATE
MOD 1
MOD 2
MOD 3
MOD 4
CUTOFF 1
ATTACK
RELEASE
GEK.KO


ATTACK
RELEASE


ATTACK
DECAY
RELEASE
AMPLITUDE

ГЕК.КОН

Monophonic Digital Synthesiser

User Manual

GEK.KON

Monophonic Digital Synthesiser

| User Manual

Content
User Manual

The Synth Architecture

Gek.kon is a monophonic digital lo-fi synthesiser. An oscillator is generating a waveform that contains digital artefacts, which we can smooth with a simple analogue filter. Smoothing the waveform brings new sounding, giving us a spectrum from lo-fi till vintage timbres.

Gek.kon has:

- **Syncable DCO 1 & 2 generating sawtooth, triangle, sine and pulse waveforms**
- **Modulator LFO applied to Oscillators, Amplifier, PWM and Envelope of the Filter**
- **Classic Envelope Generator ADSR**
- **Dual analogue filter 6 db per octave**
- **Filter Phase Inversion**
- **Extra effect features like overdrive, fuse, noise and distortion**
- **Midi input, assignable midi channels**
- **Monophonic audio output**

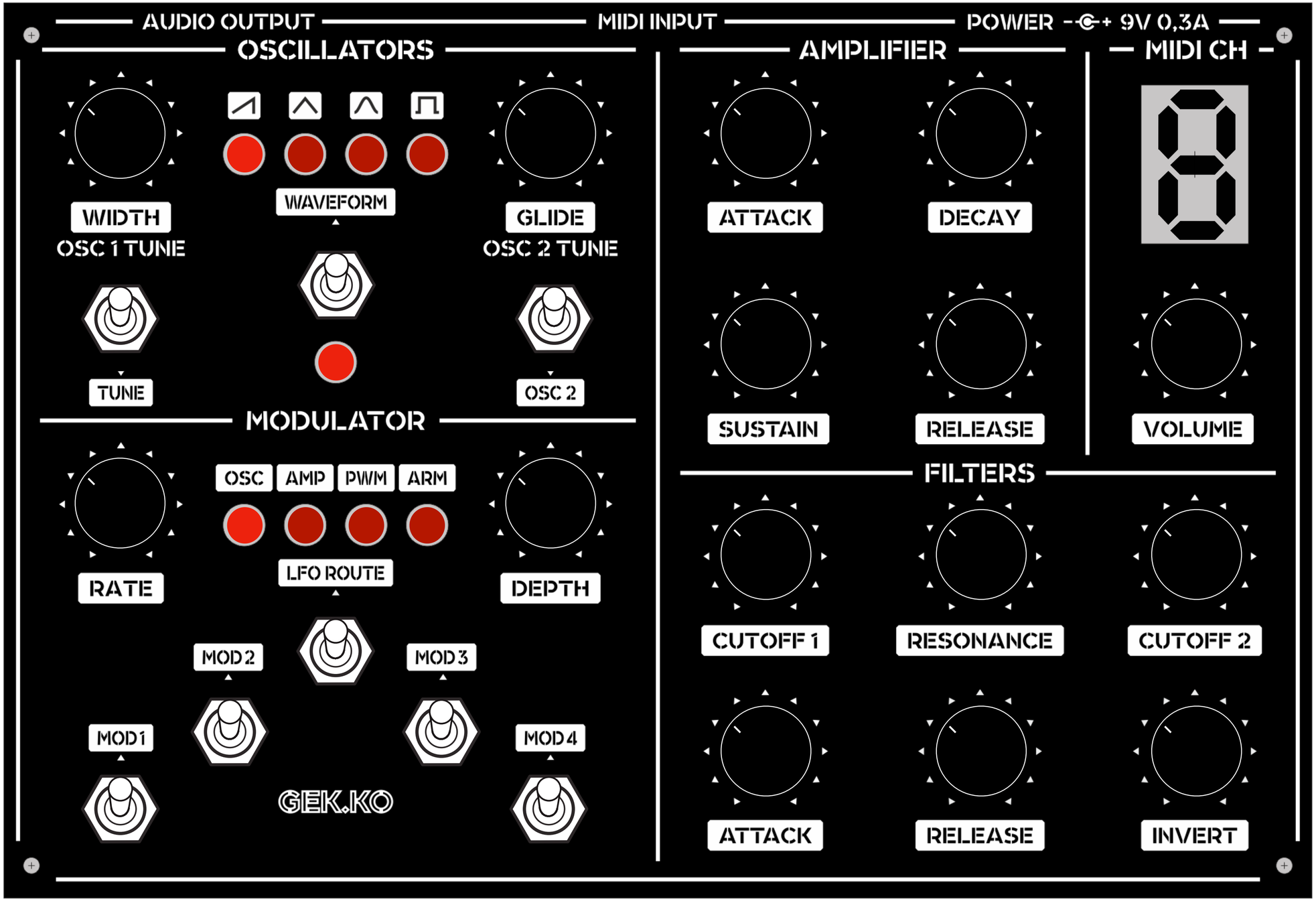

The Synth Architecture

DCO 1 + 2

Dual Filter with Phase Inversion

Modulator to multiple destinations

Amplifier ADSR

Midi Channel + Active Function screen

Signal Flow

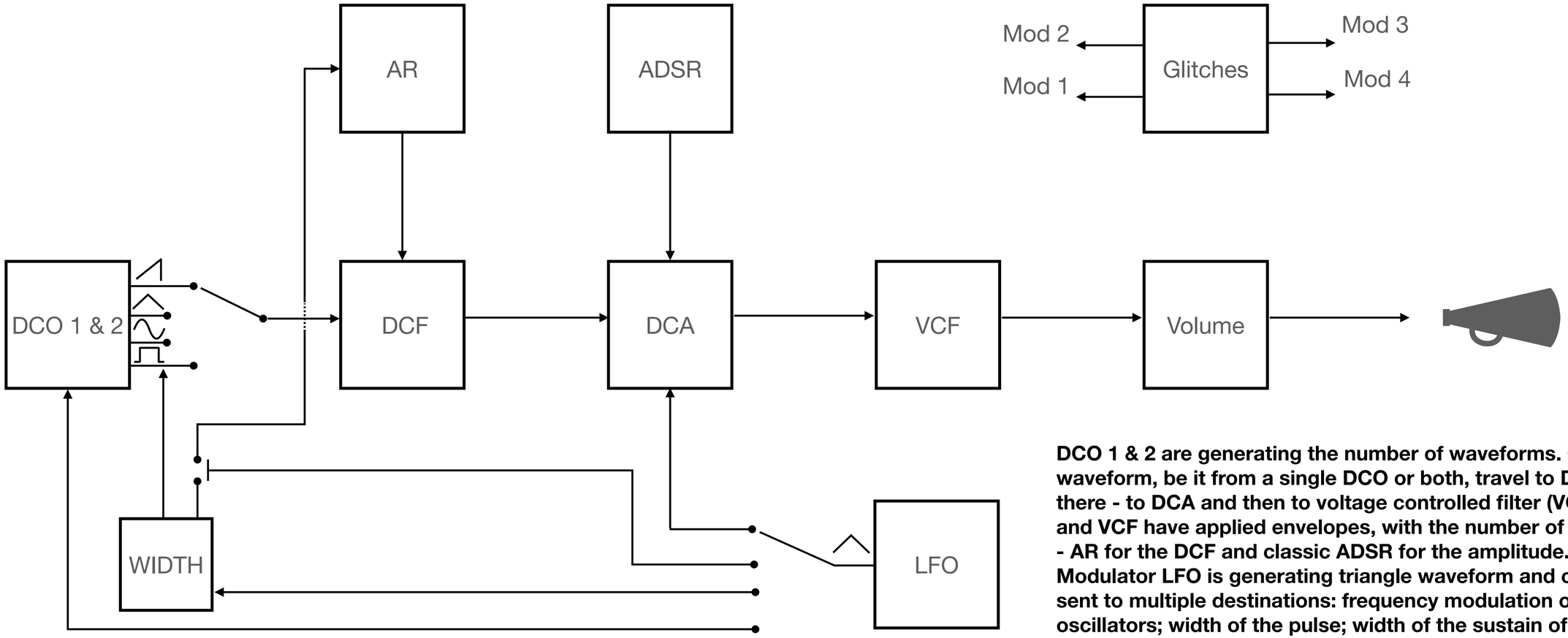

DCO 1 & 2 are generating the number of waveforms. Chosen waveform, be it from a single DCO or both, travel to DCF, from there - to DCA and then to voltage controlled filter (VCF). DCA and VCF have applied envelopes, with the number of controls - AR for the DCF and classic ADSR for the amplitude. Modulator LFO is generating triangle waveform and can be sent to multiple destinations: frequency modulation of the oscillators; width of the pulse; width of the sustain of the filter and the amplitude (level). Glitches, as a circuit bending, can be applied to the signal before the output, one by one or in any combination relatively to each other.

DCO 1 & 2

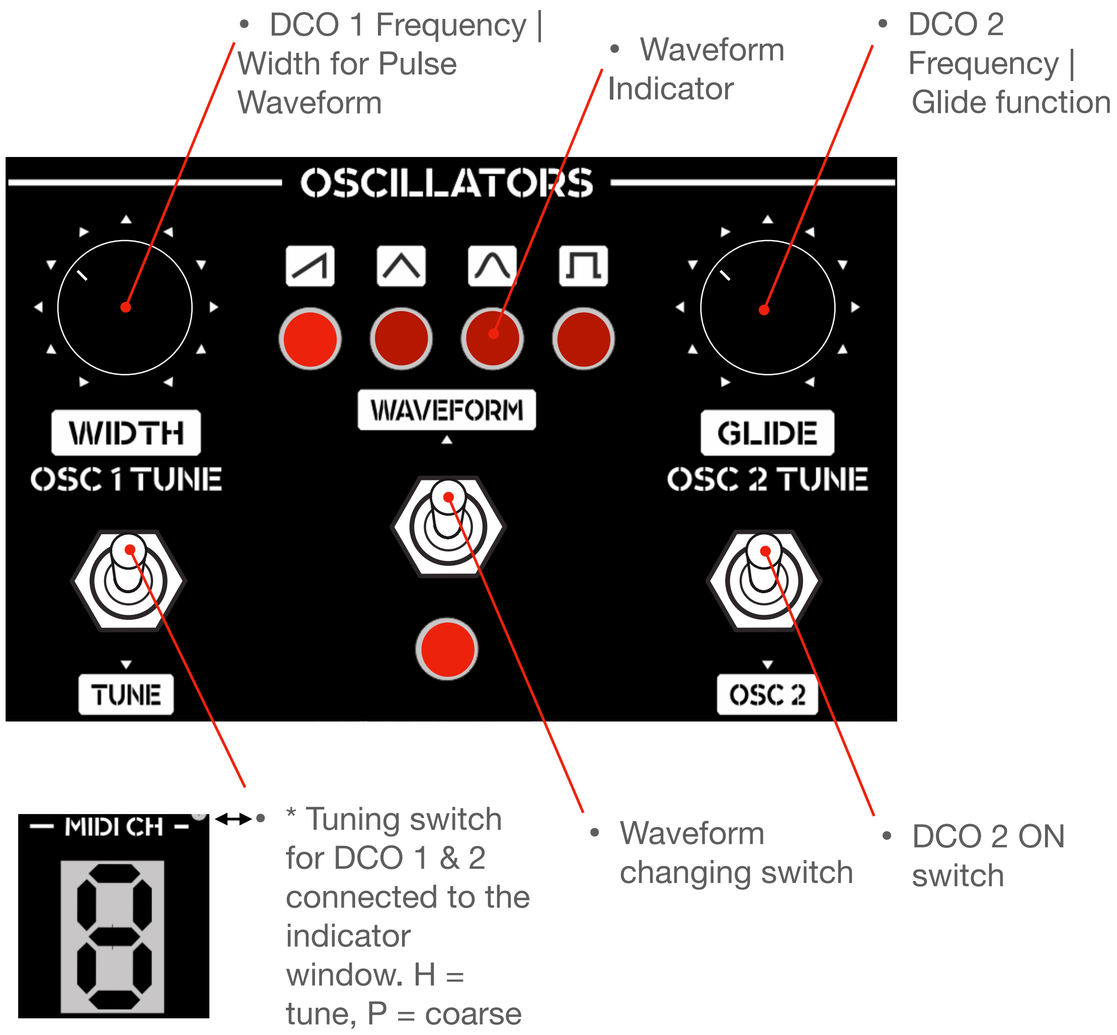

Gek.kon has 2 identical DCOs (OSC 1 and 2) on board, that can be used one at a time or both simultaneously.

DCO 1 (OSC 1) is used when only 1 voice is required. According switch under the DCO 2 (OSC 2) activates the second DCO. Both DCOs generate the following waveforms: sawtooth, triangle, sine and pulse (square), which you can change with Waveform switch. Both DCOs would generate the chosen waveform.

Both DCOs can be tuned to each other, using the Tune switch, that would activate Tuning and Coarse, displayed on the indicator as letters H and P; and work in *hard sync* mode by default. When Pulse (square) waveform is used, the potentiometer 1 functions as Width setting knob. Second potentiometer also works as Glide, after the tuning is confirmed.

DCO 1 & 2

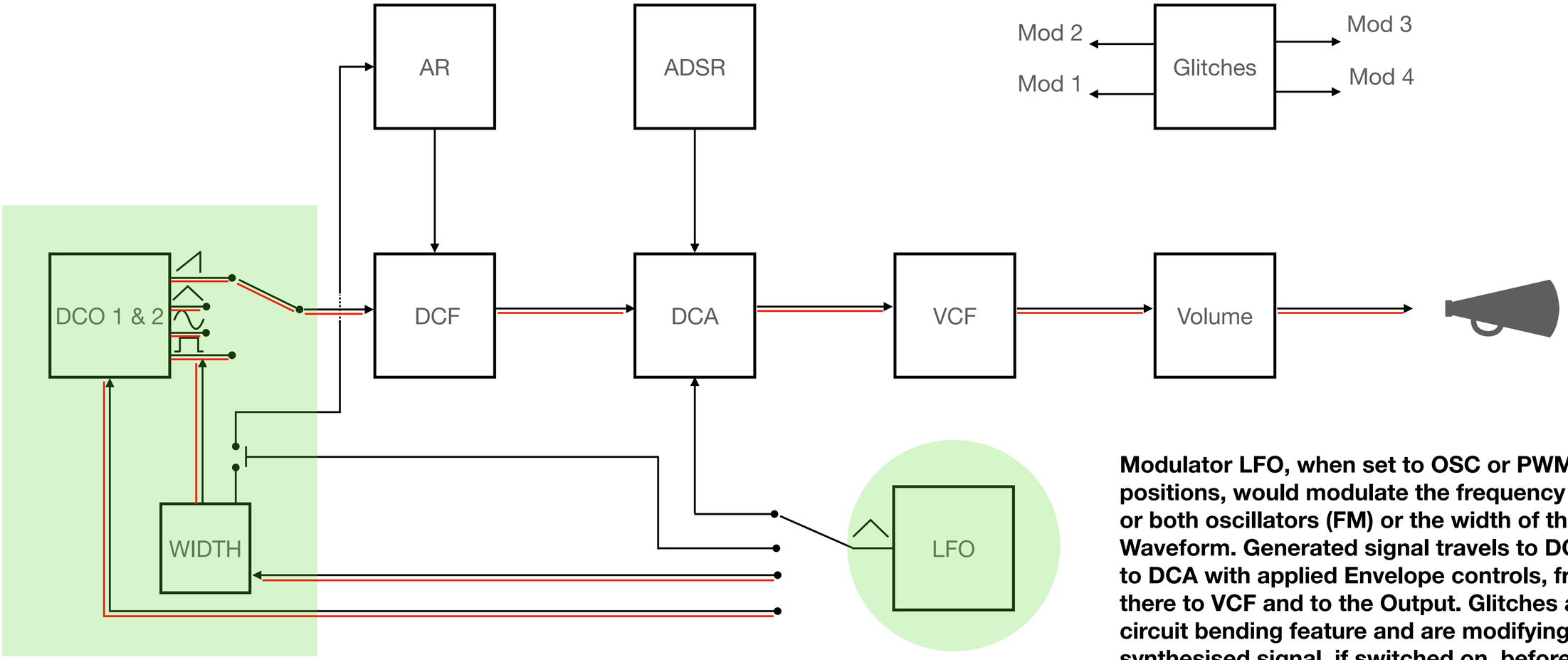

Modulator LFO, when set to OSC or PWM positions, would modulate the frequency of one or both oscillators (FM) or the width of the Pulse Waveform. Generated signal travels to DCF, then to DCA with applied Envelope controls, from there to VCF and to the Output. Glitches are the circuit bending feature and are modifying the synthesised signal, if switched on, before travelling to the Output.

Dual Filter

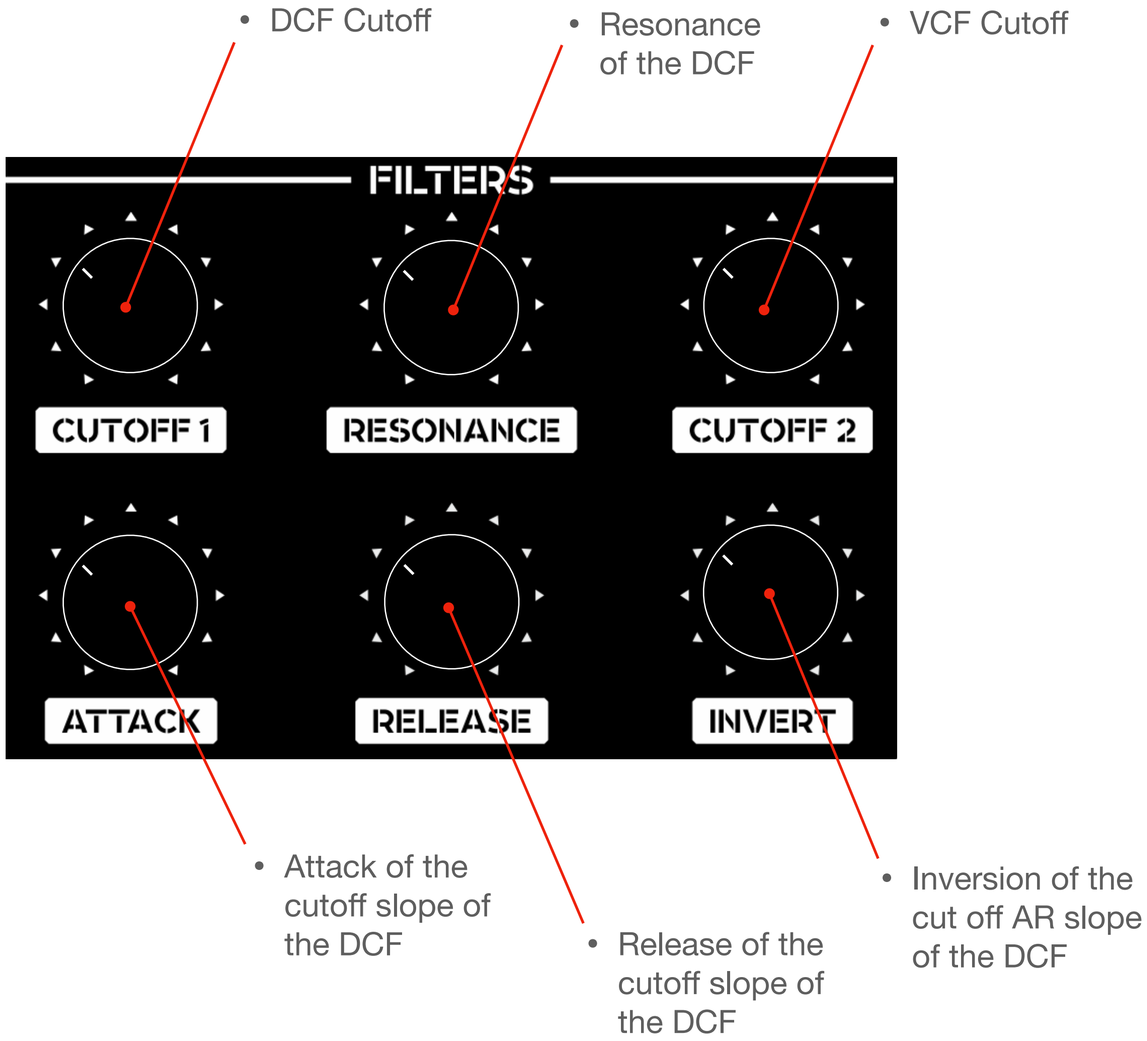

Gek.kon has 2 filters on board: DCF and VCF. Digitally controlled filter has also a Resonance function control, whereas VCF has only the cutoff envelope control. Attack - Release controls are applied to the DCF cutoff, and can be modulated by LFO or width of the pulse waveform of the DCO.

DCF cutoff curve can also be inverted - the level of the inversion is controlled by the according potentiometer.

Dual Filter

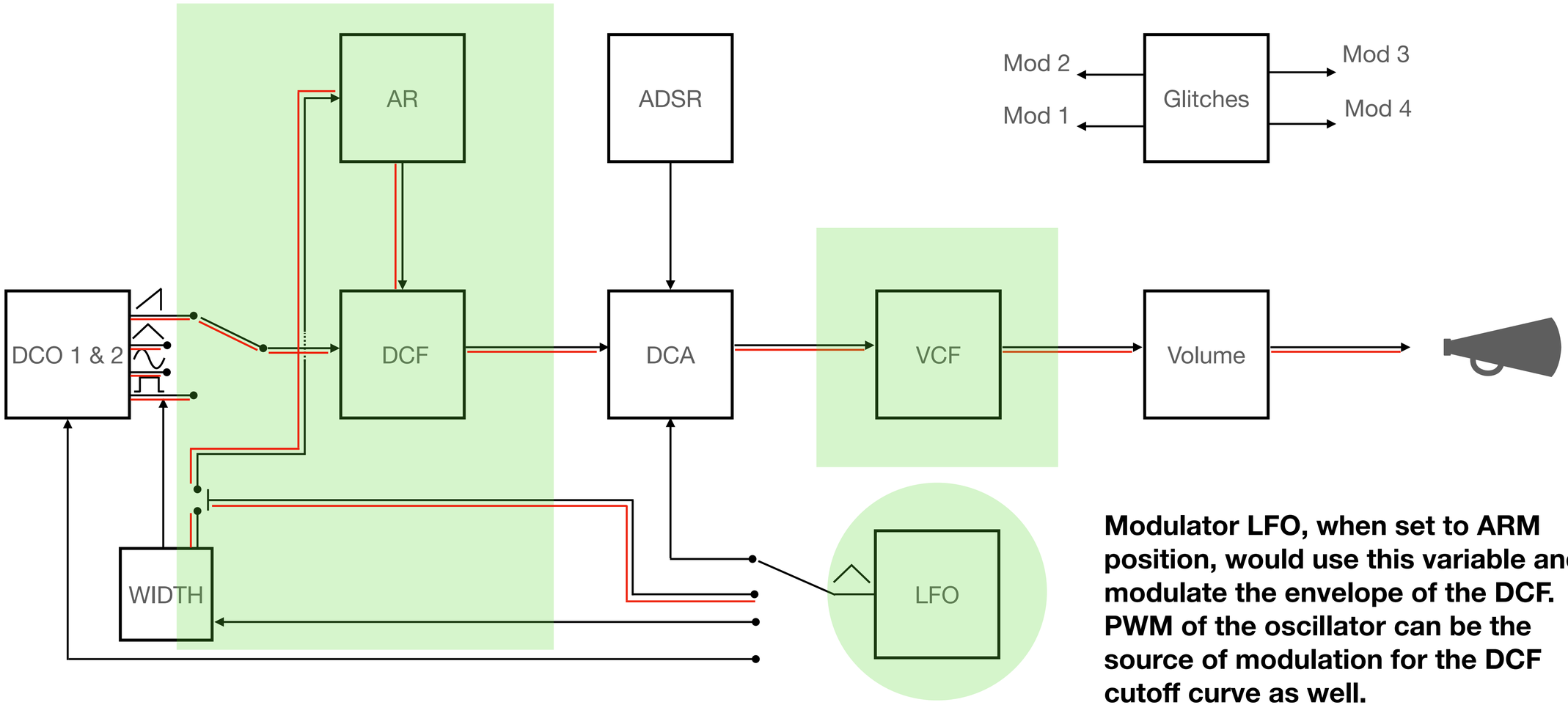

Modulator LFO, when set to ARM position, would use this variable and modulate the envelope of the DCF. PWM of the oscillator can be the source of modulation for the DCF cutoff curve as well.

Modulator

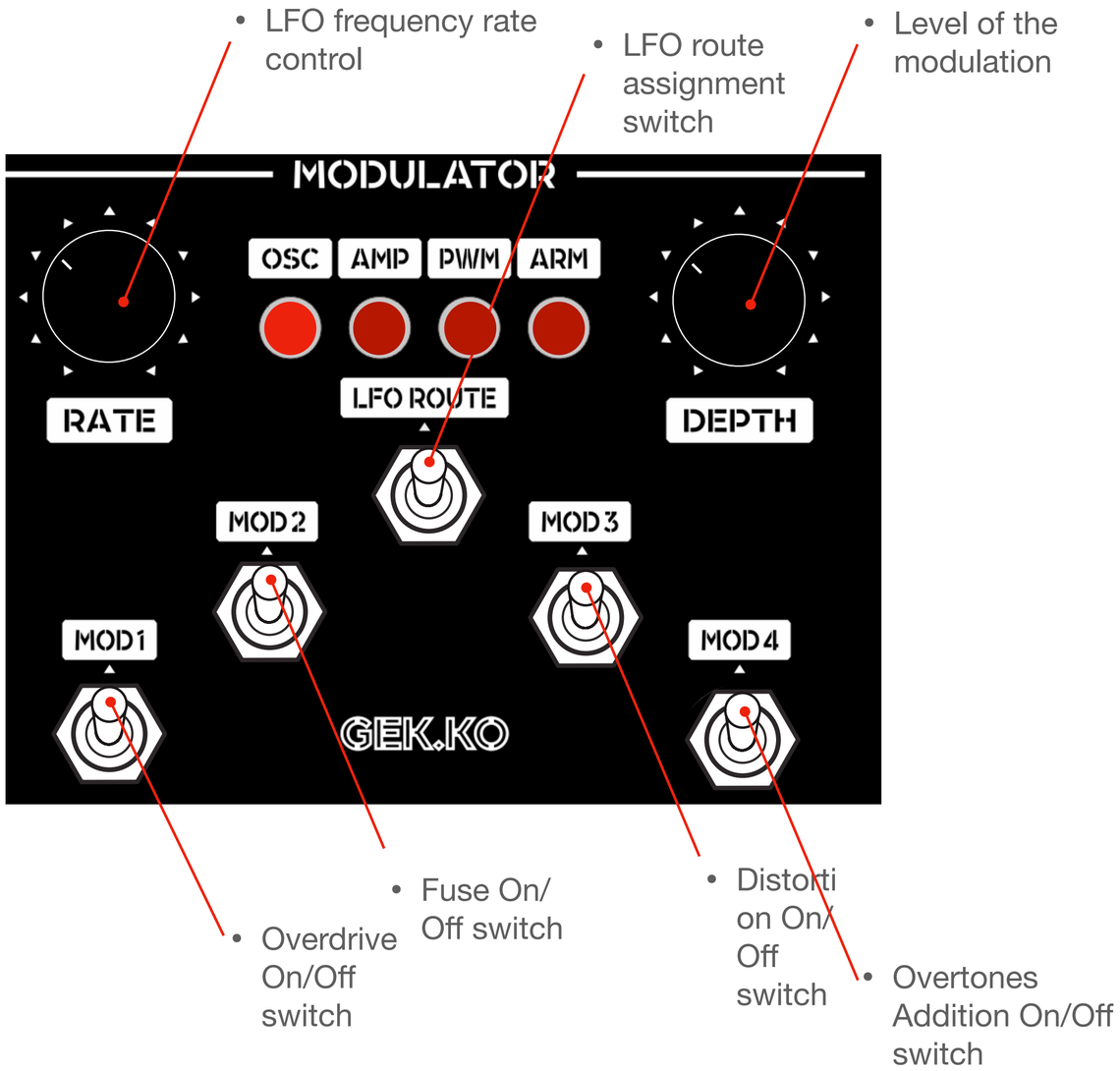

Gek.kon has a modulator section, that is LFO, generating triangle waveform, that can be sent to different destinations: frequency modulation of the oscillators, amplifier (DCA), Pulse Width of the Pulse (square) waveform of oscillators and AR (attack-release) of the envelope of the DCF.

Additionally this section has a number of switches, that are activating Fuse, Overdrive, Distortion and Noise.

Modulator

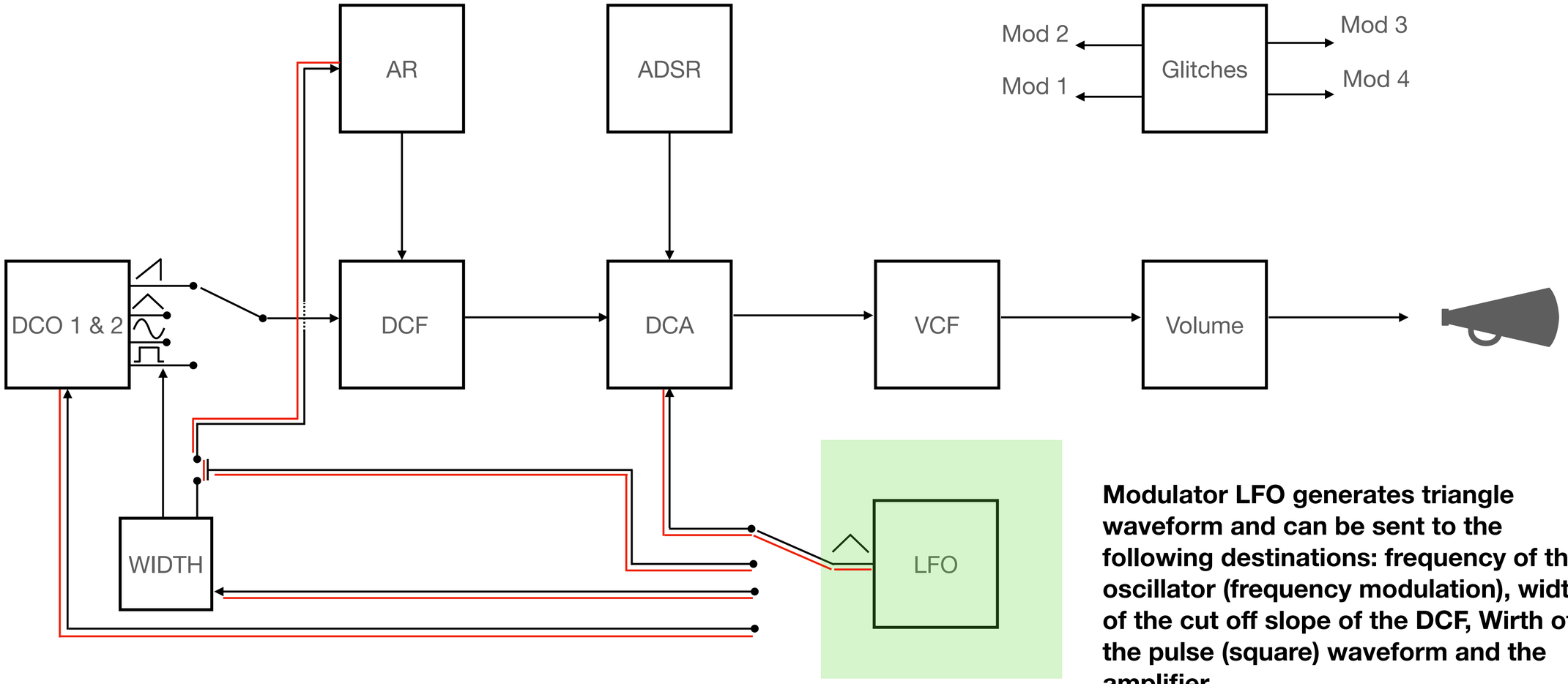

Modulator LFO generates triangle waveform and can be sent to the following destinations: frequency of the oscillator (frequency modulation), width of the cut off slope of the DCF, Wirth of the pulse (square) waveform and the amplifier.

Amplifier

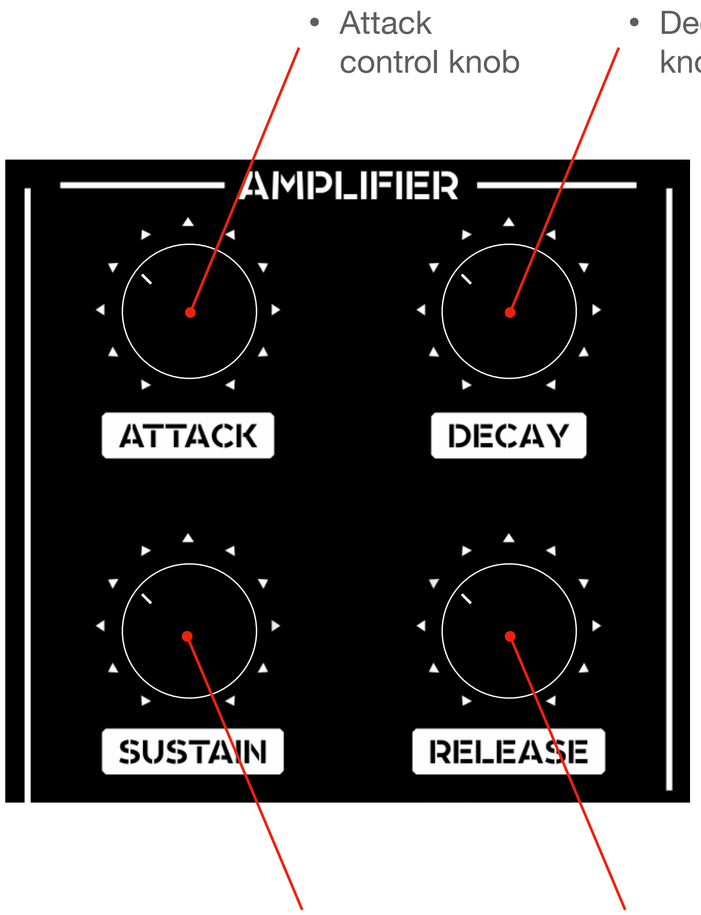

- Attack control knob
- Decay opening knob
- Sustain control knob
- Release of the envelope

Gek.kon passes the signal to the DCA, before releasing it to the output. DCA stands for digitally controlled amplifier, and has an envelope control over the loudness of the signal.

With the classic set of Attack, Decay, Sustain and Release, the signal can be transformed from long pressed-like soundscapes till the plucky percussive types of sounds.

Amplifier

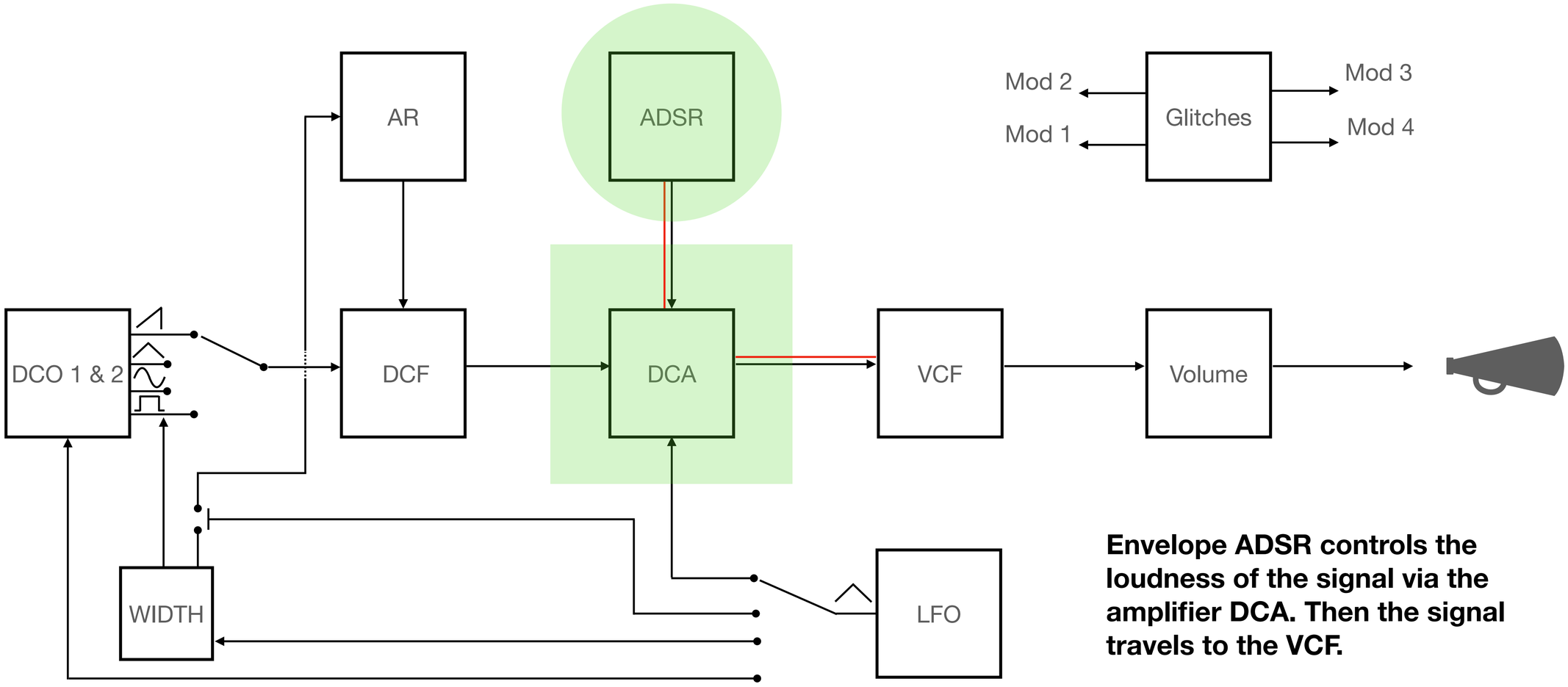

Envelope ADSR controls the loudness of the signal via the amplifier DCA. Then the signal travels to the VCF.

MIDI settings

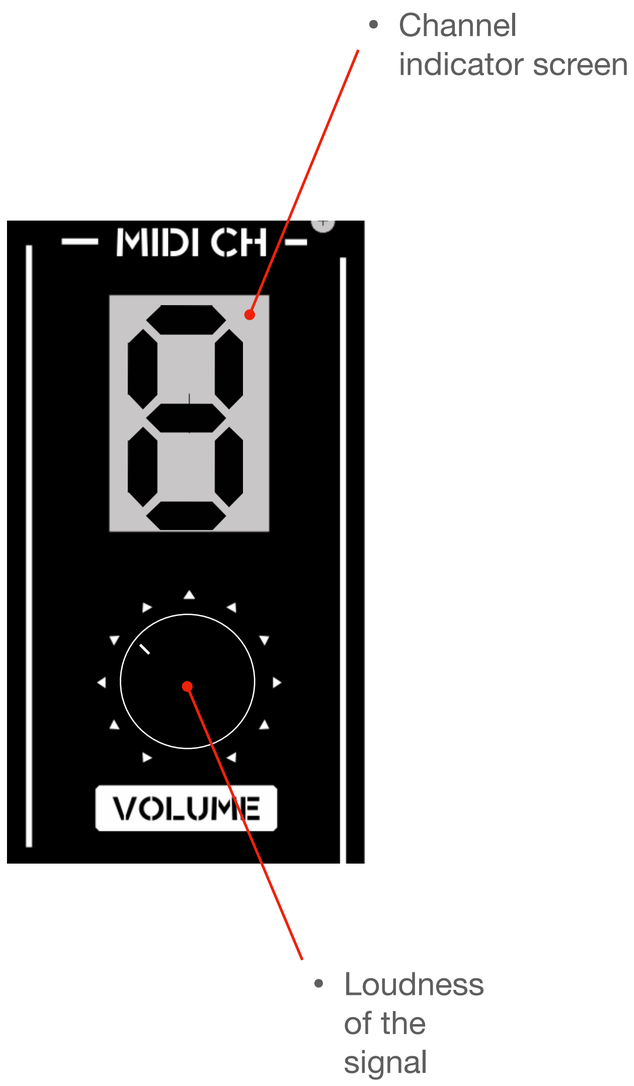

Gek.kon can have up till 8 different midi channels. Connect you midi controller with the 5 pin midi input on the rear panel of the machine. Assign the midi channel by pressing the knob on the back. You will see changing numbers from 0 - 8. Choose the number and press the knob on the back again. Gek.kon will automatically remember the channel you choose to use.

Modulation wheel of your midi controller is active in working with the Gek.kon.

Creating Sounds

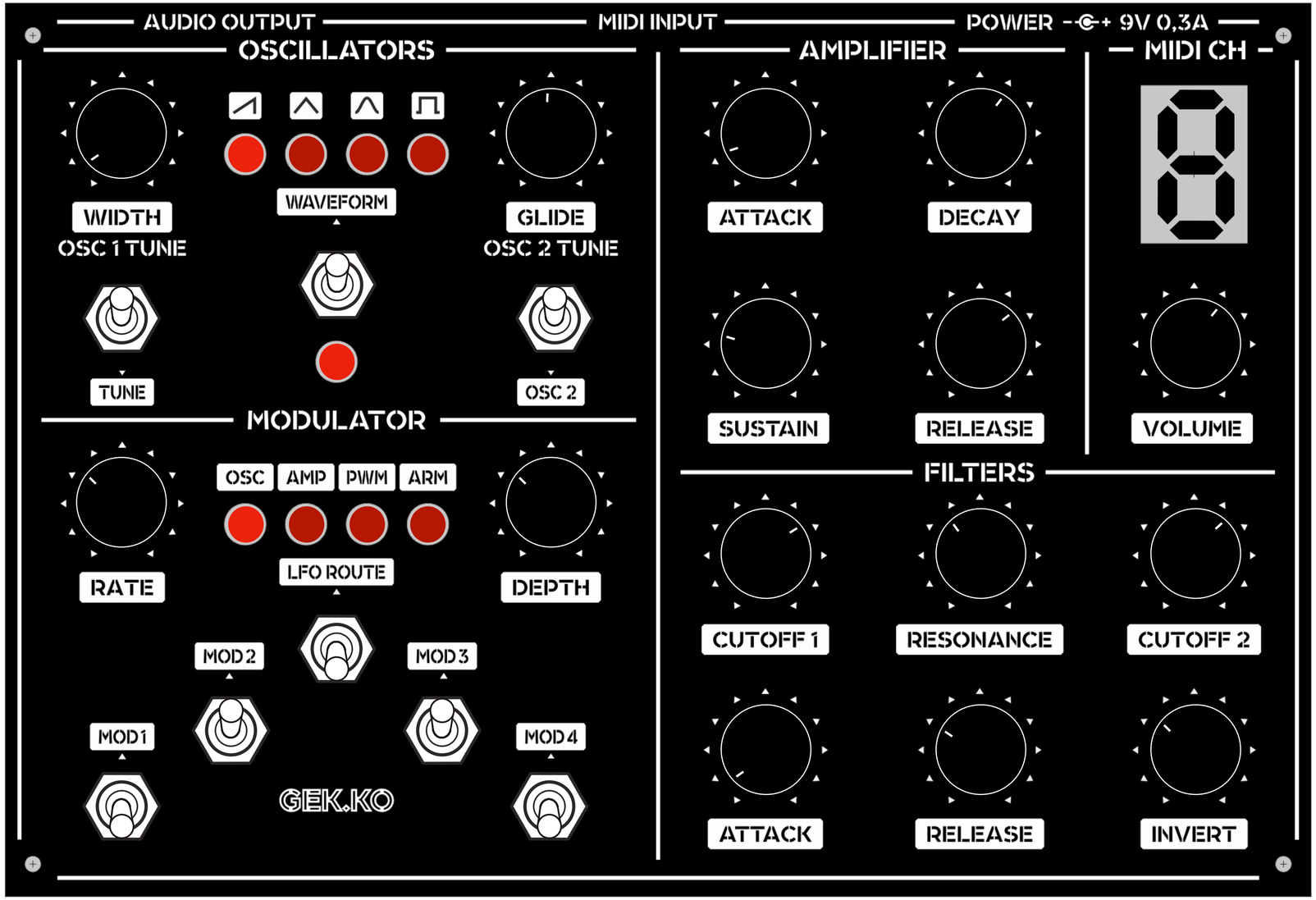

We synthesised some of the sound examples Gek.kon can generate. If you set the knobs and switches to the same position, you will be able to re-create the sounds you could hear in introduction the videos of Gek.kon. Adding a bit of reverb is recommended.

“Liberation from False Self”

Creating Sounds

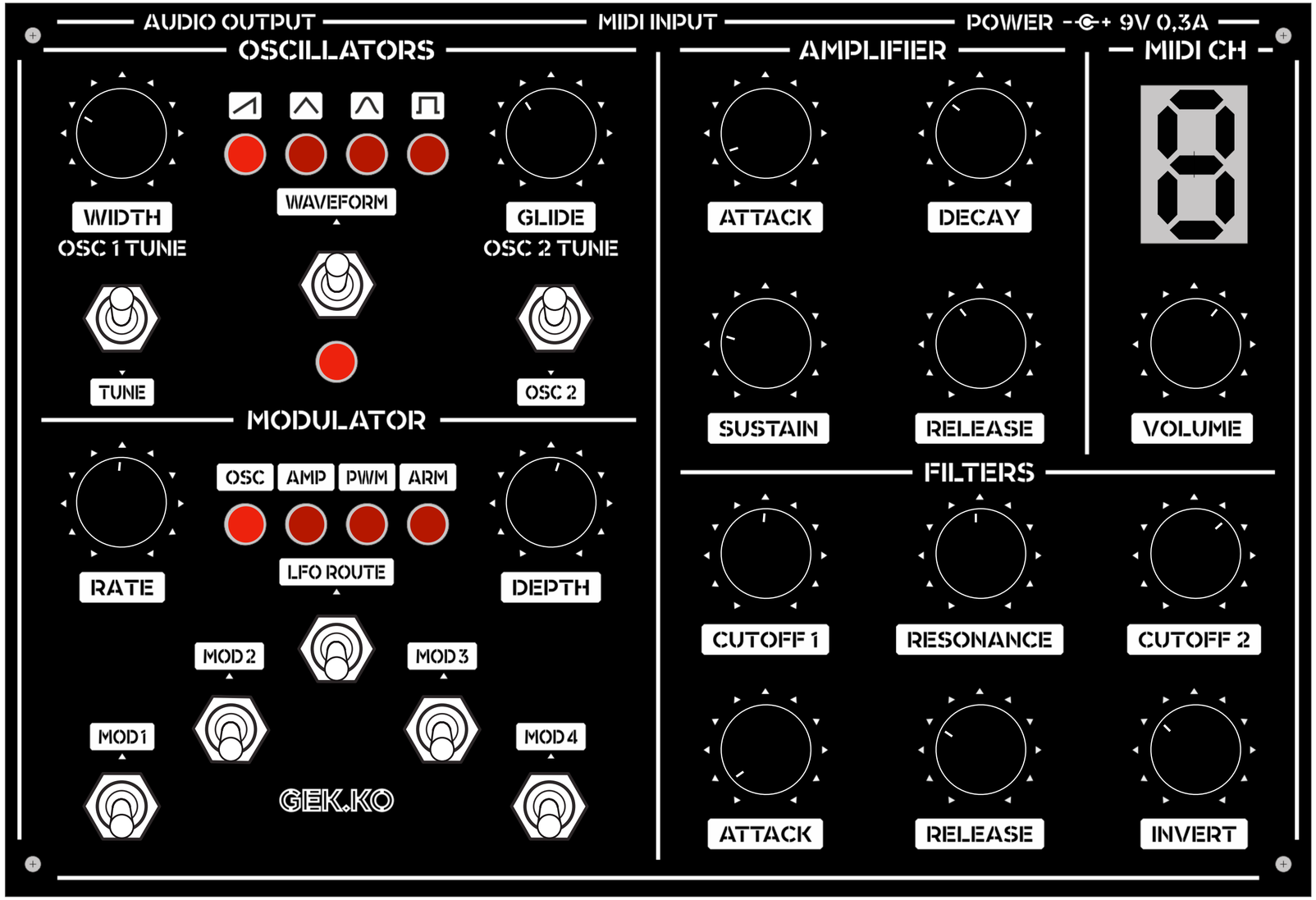

“New Hope”

Creating Sounds

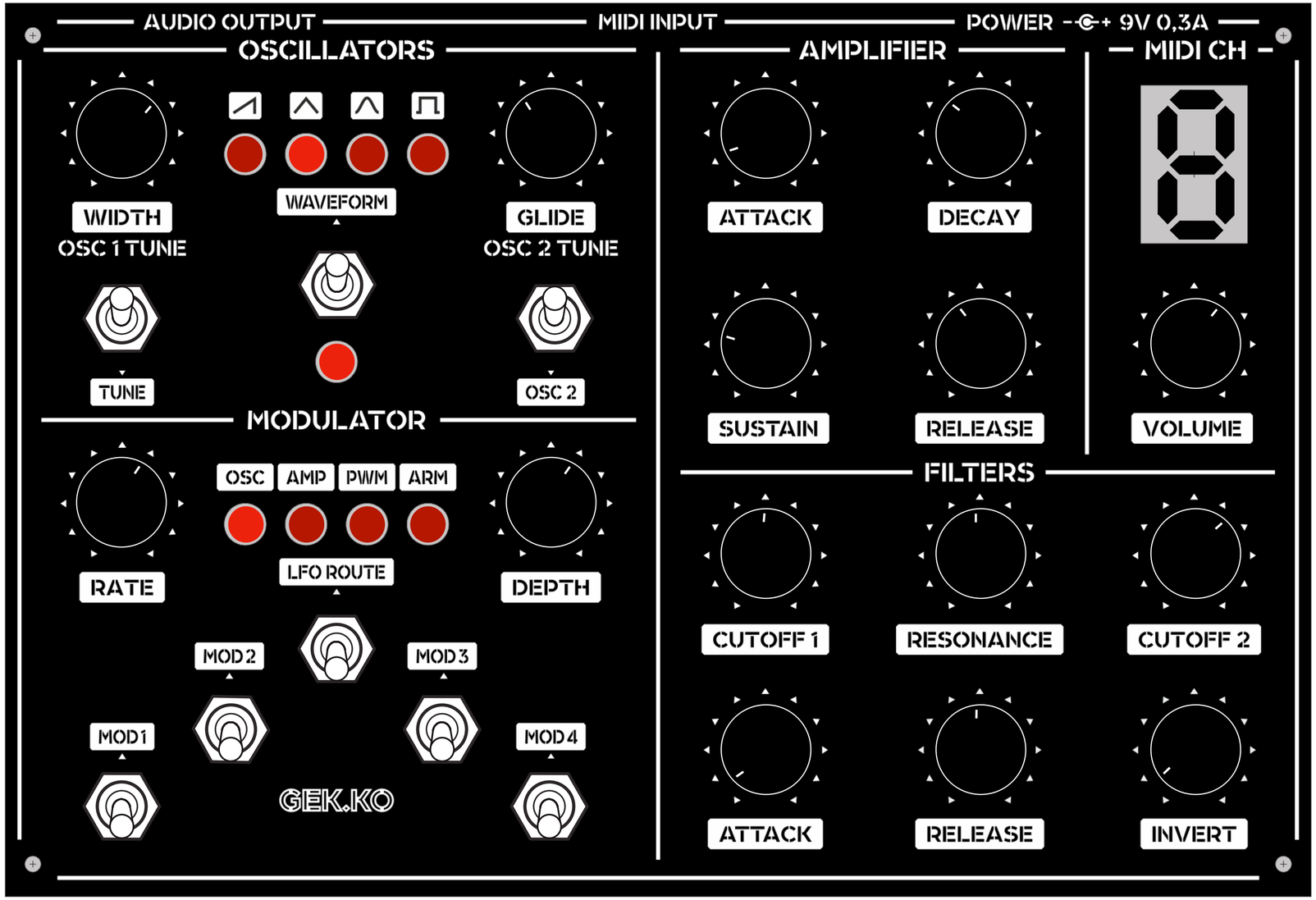

“Bird of Dawn”

Creating Sounds

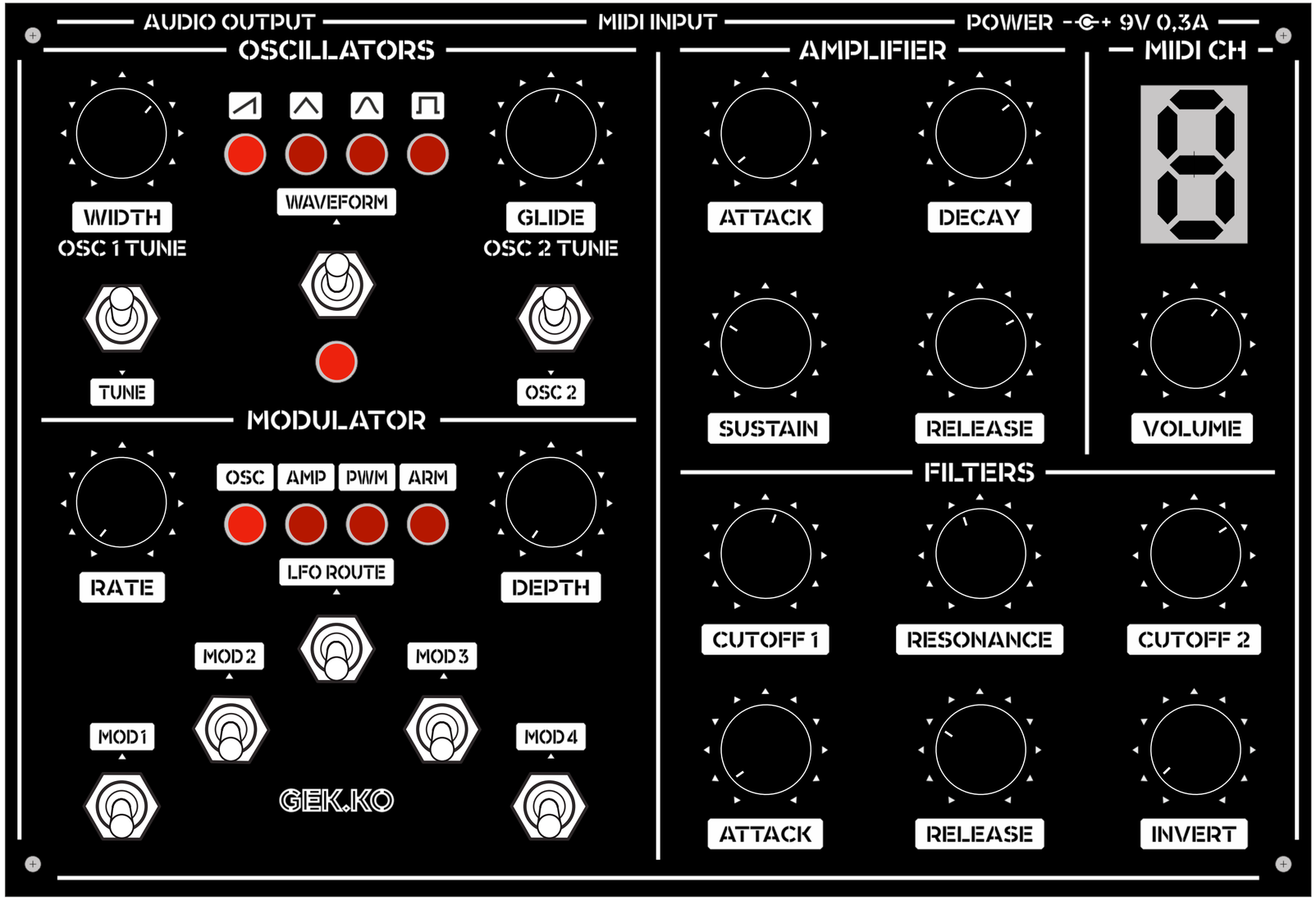

“Distant Signals”

Creating Sounds

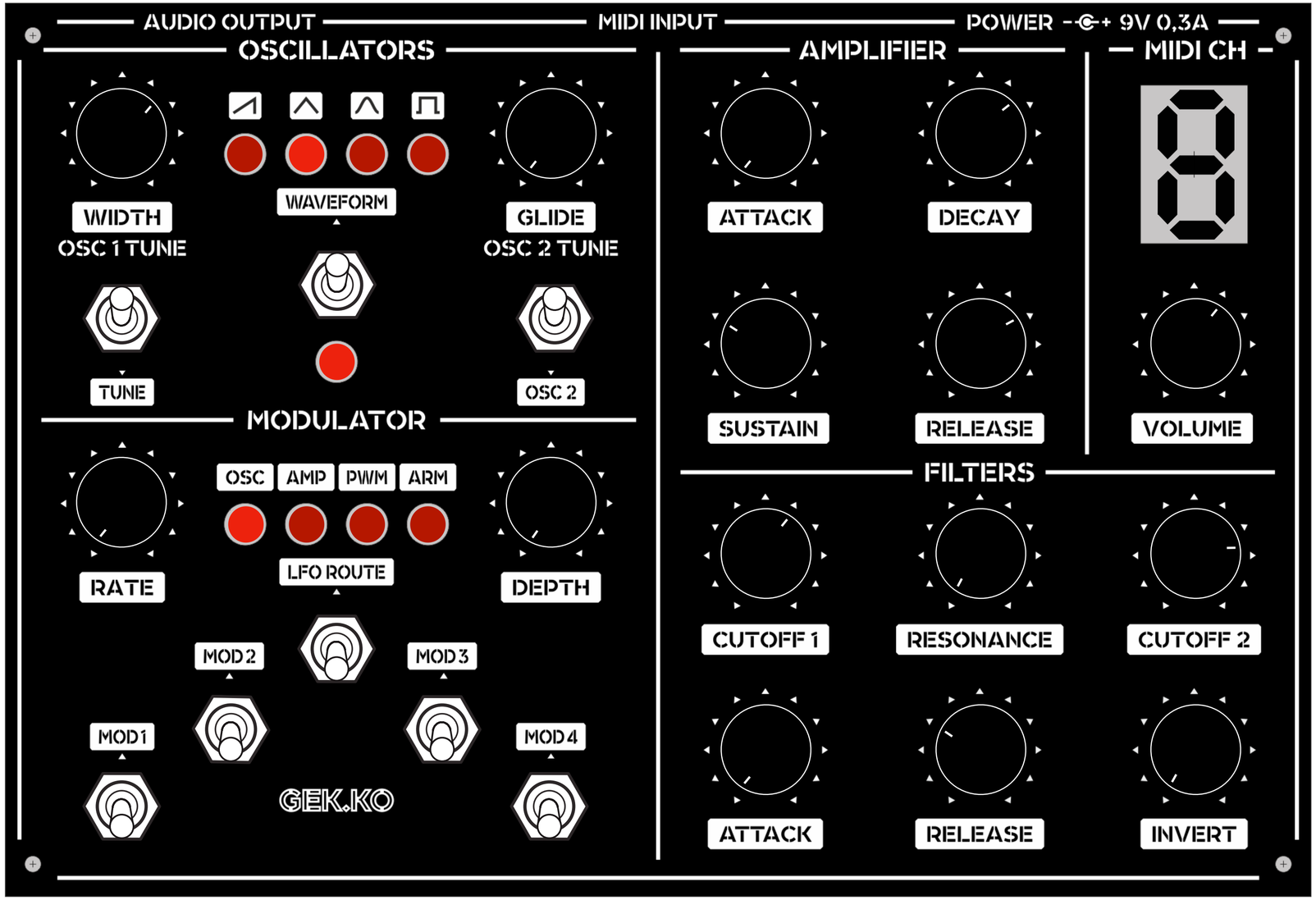

“Curiosity”

Creating Sounds

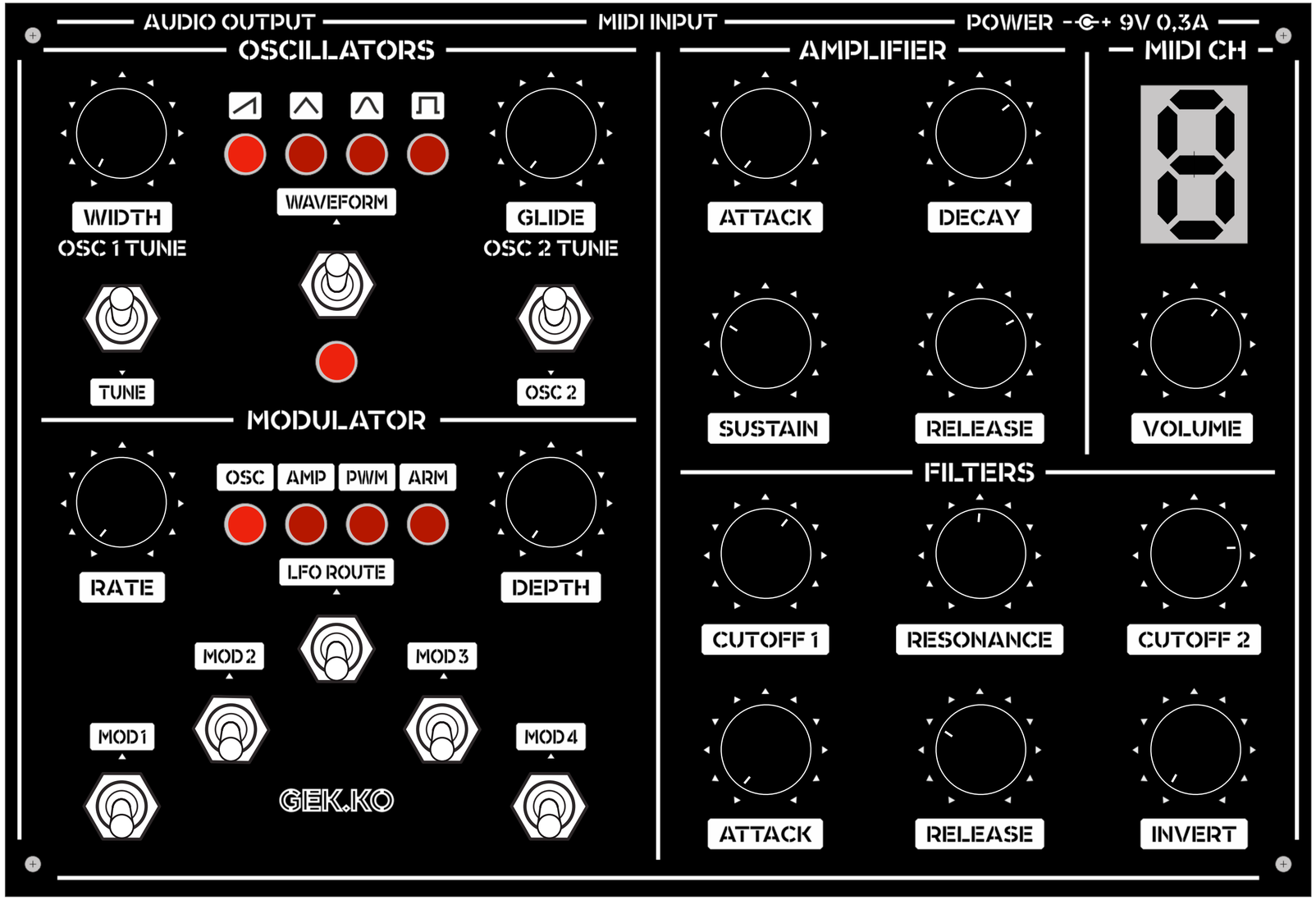

“Aphex Soul”

Creating Sounds

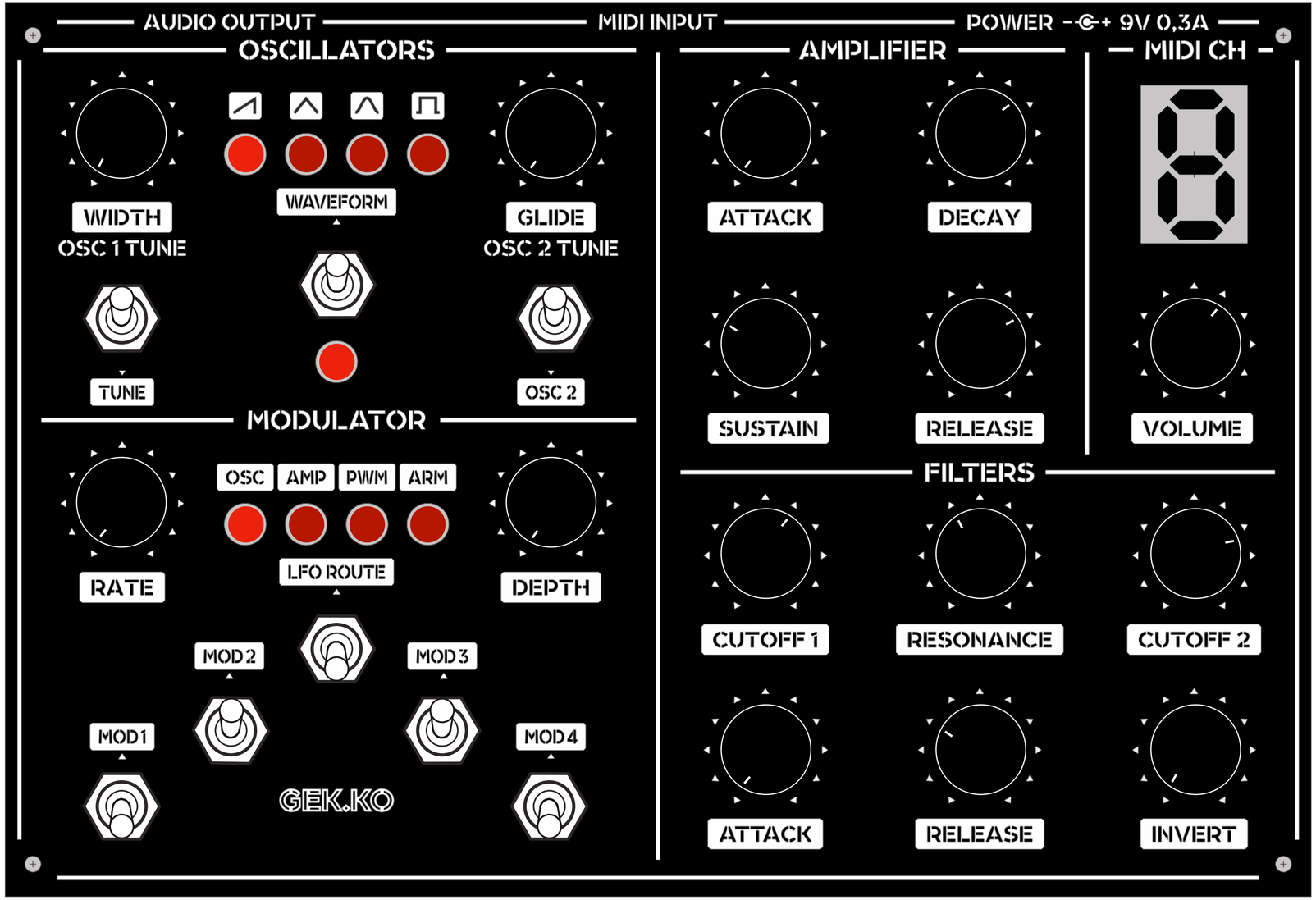

“Voices of Kynareth”

Creating Sounds

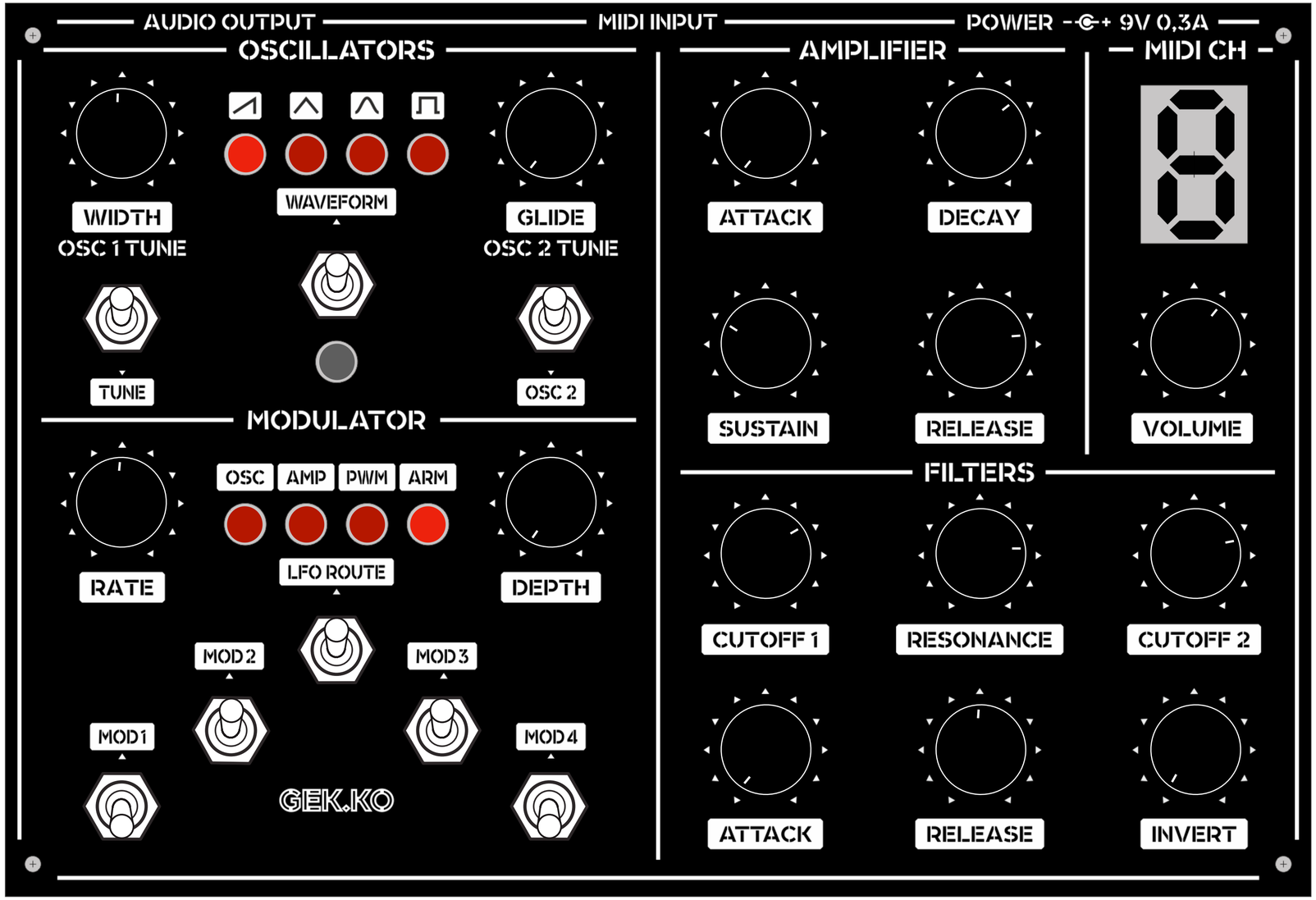

"Show me the Path"

Creating Sounds

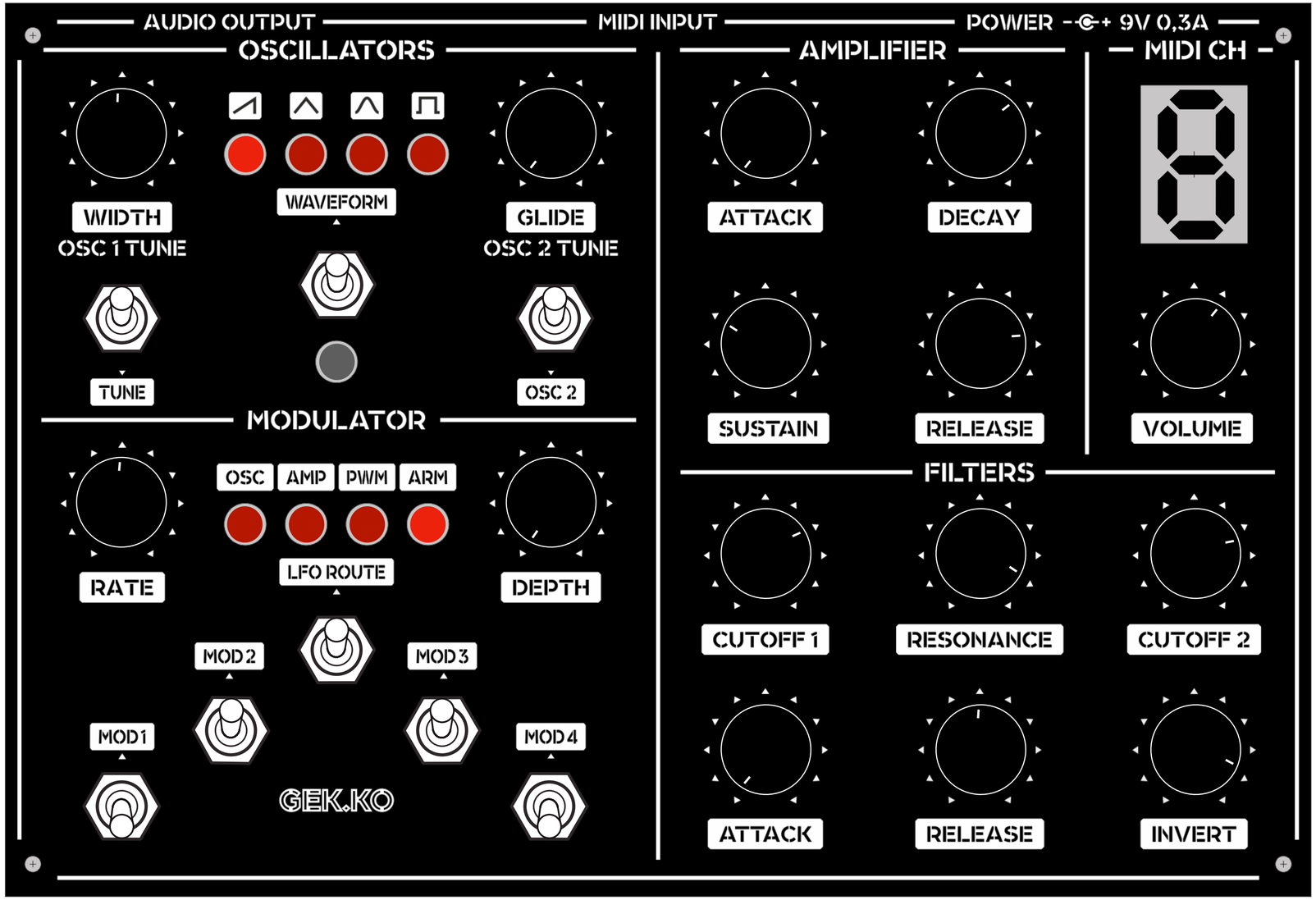

“Subworld”

Creating Sounds

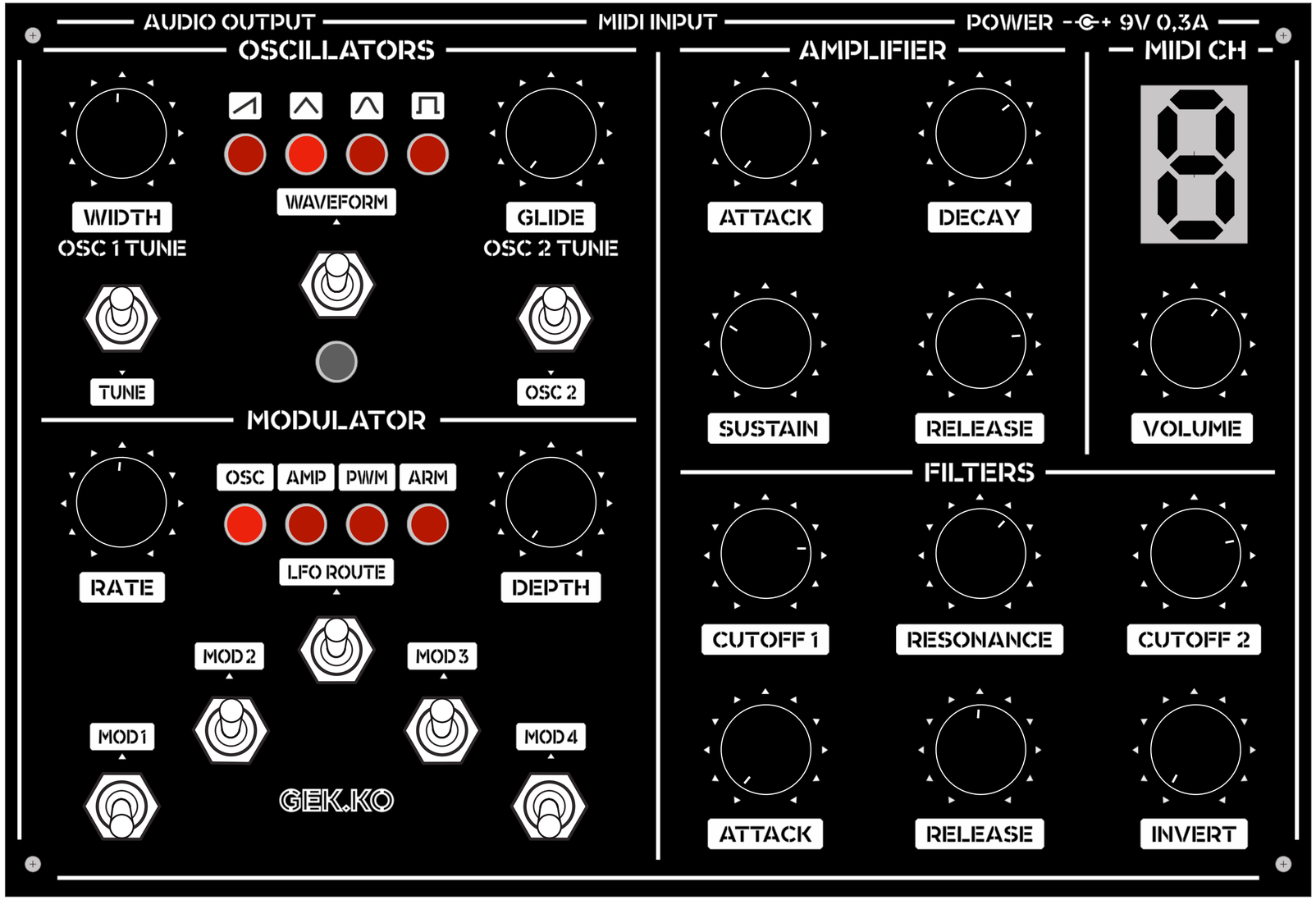

“New Horizon”

Creating Sounds

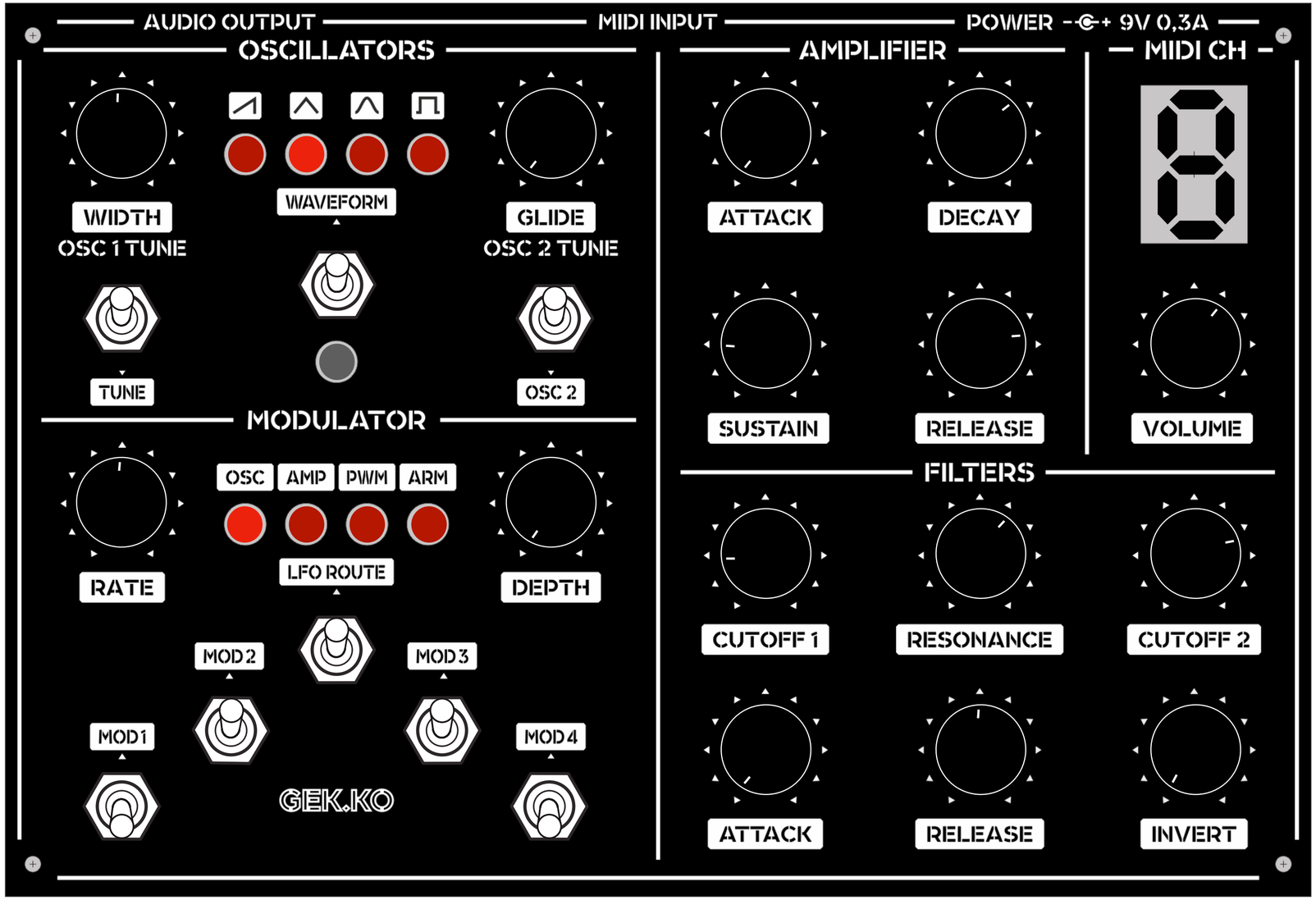

“Beautiful Day”

Creating Sounds

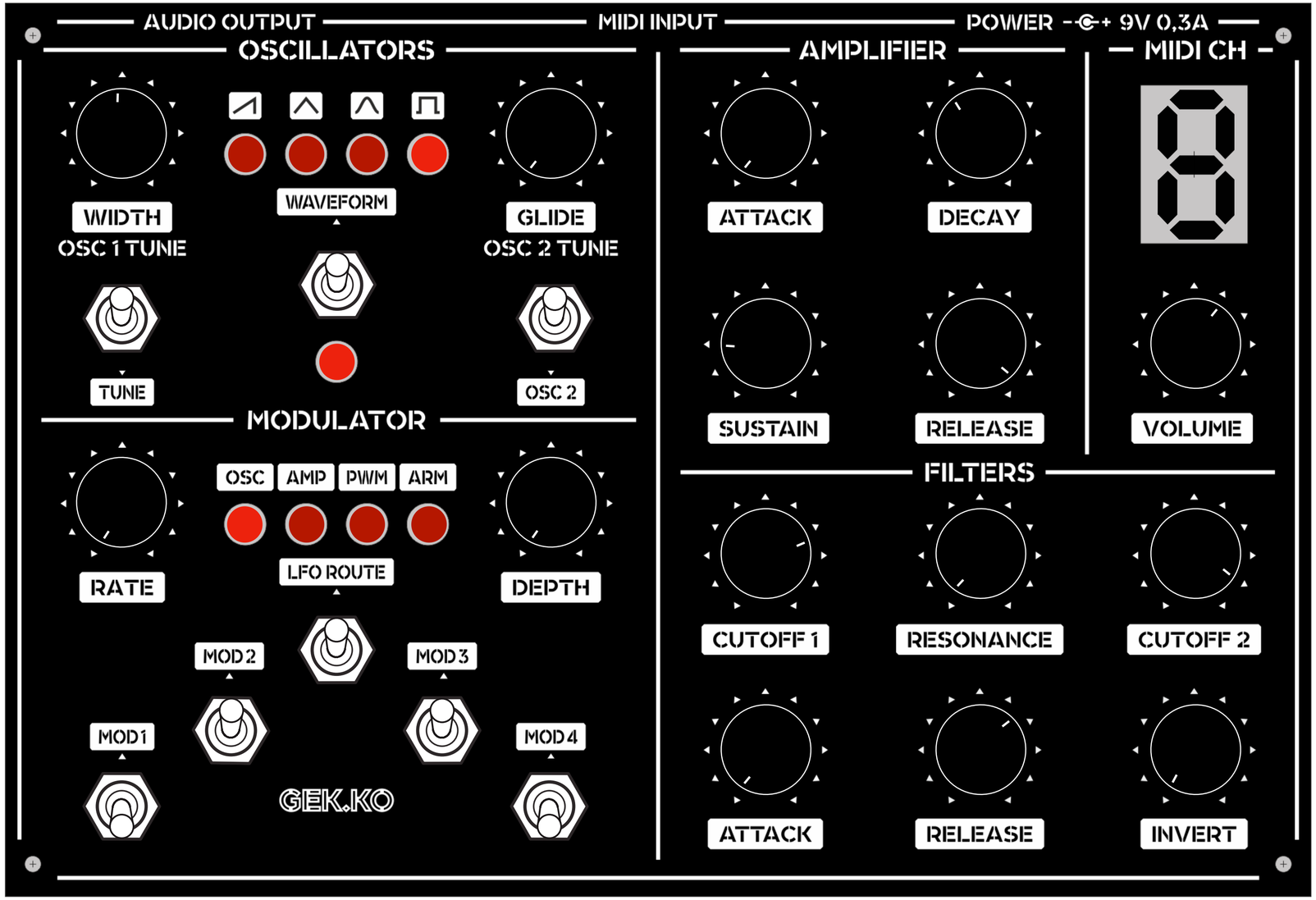

“Crystal”

Creating Sounds

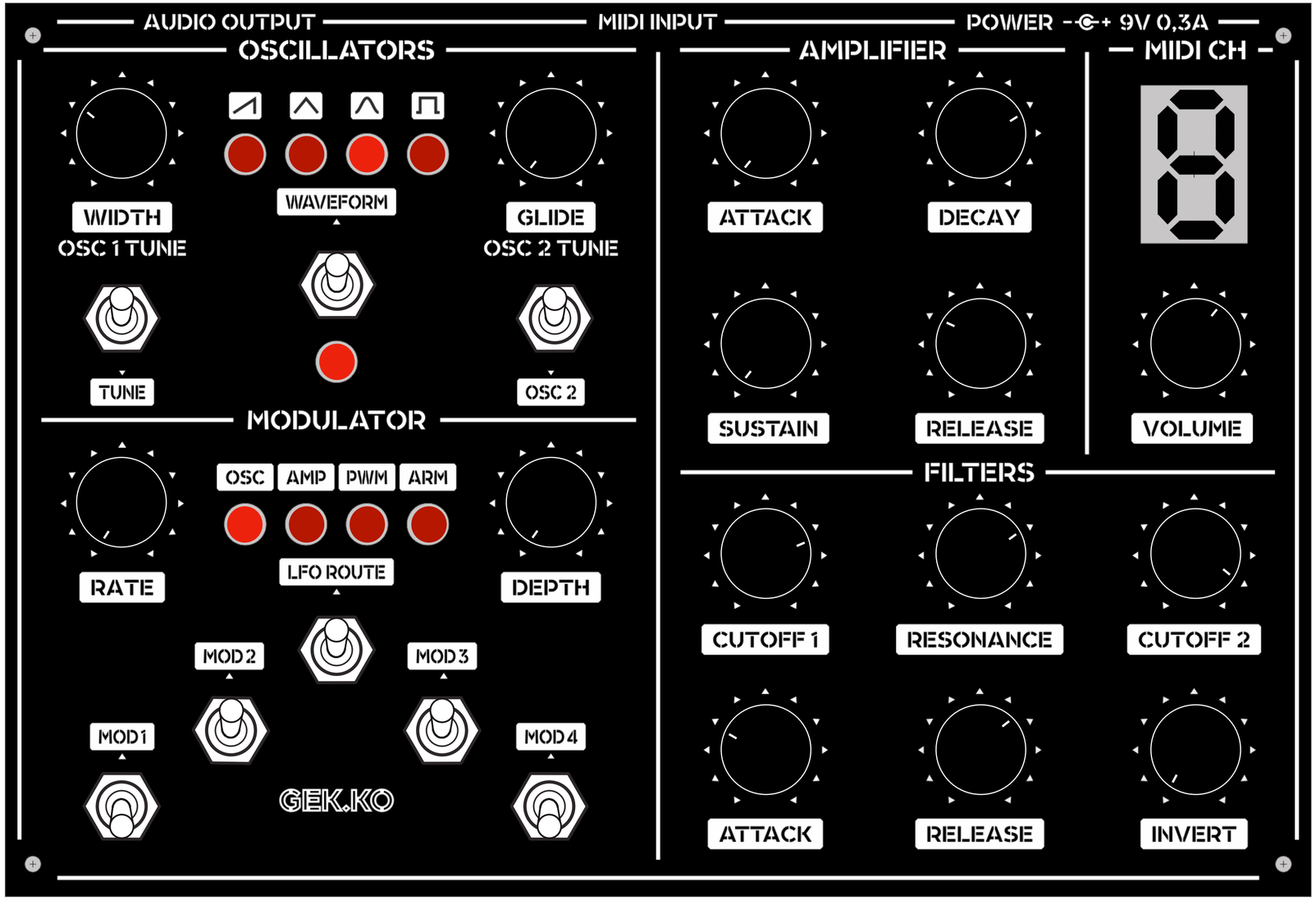

“Ocean Life”

Creating Sounds

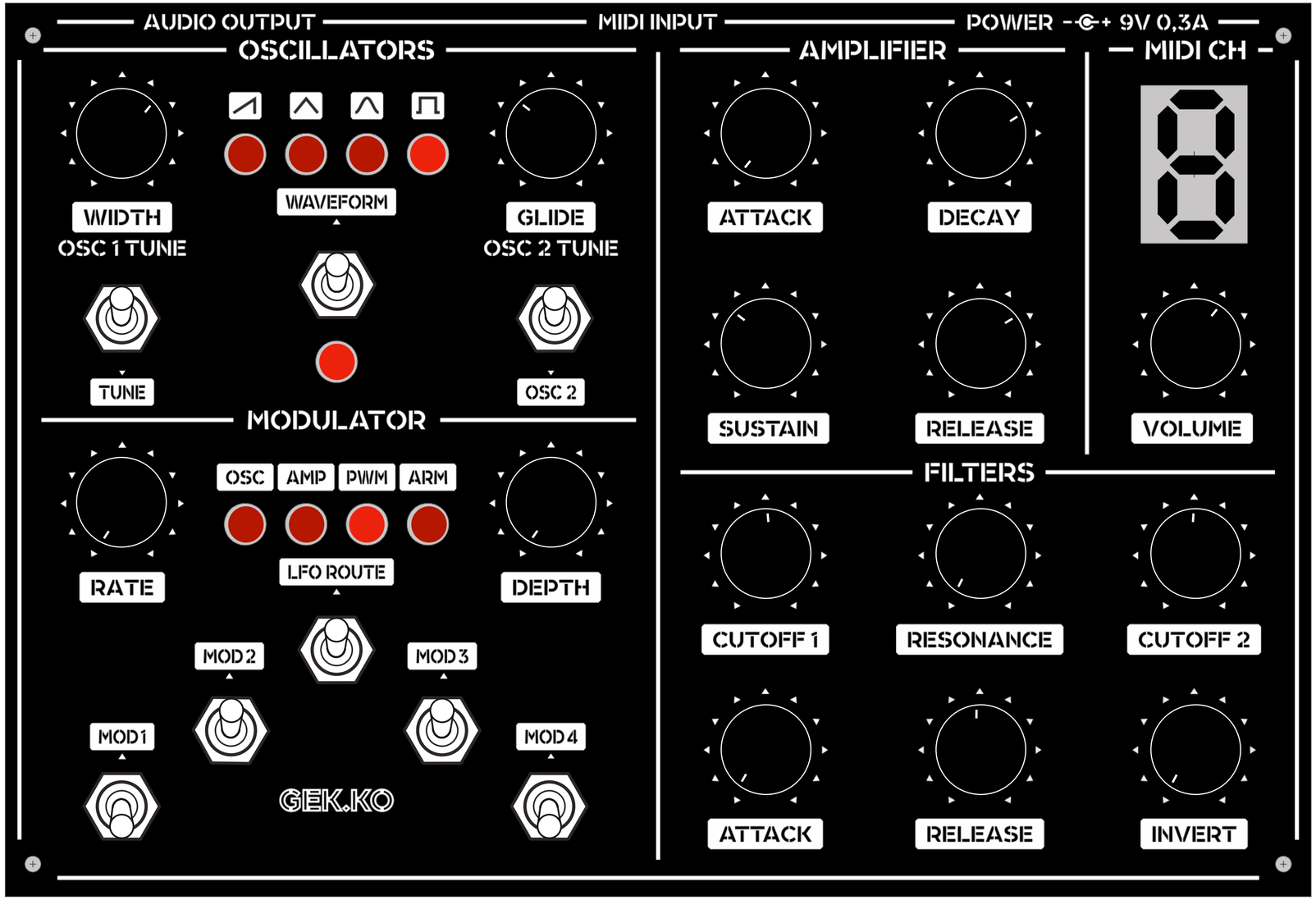

“Deep Time Dreaming”

Creating Sounds

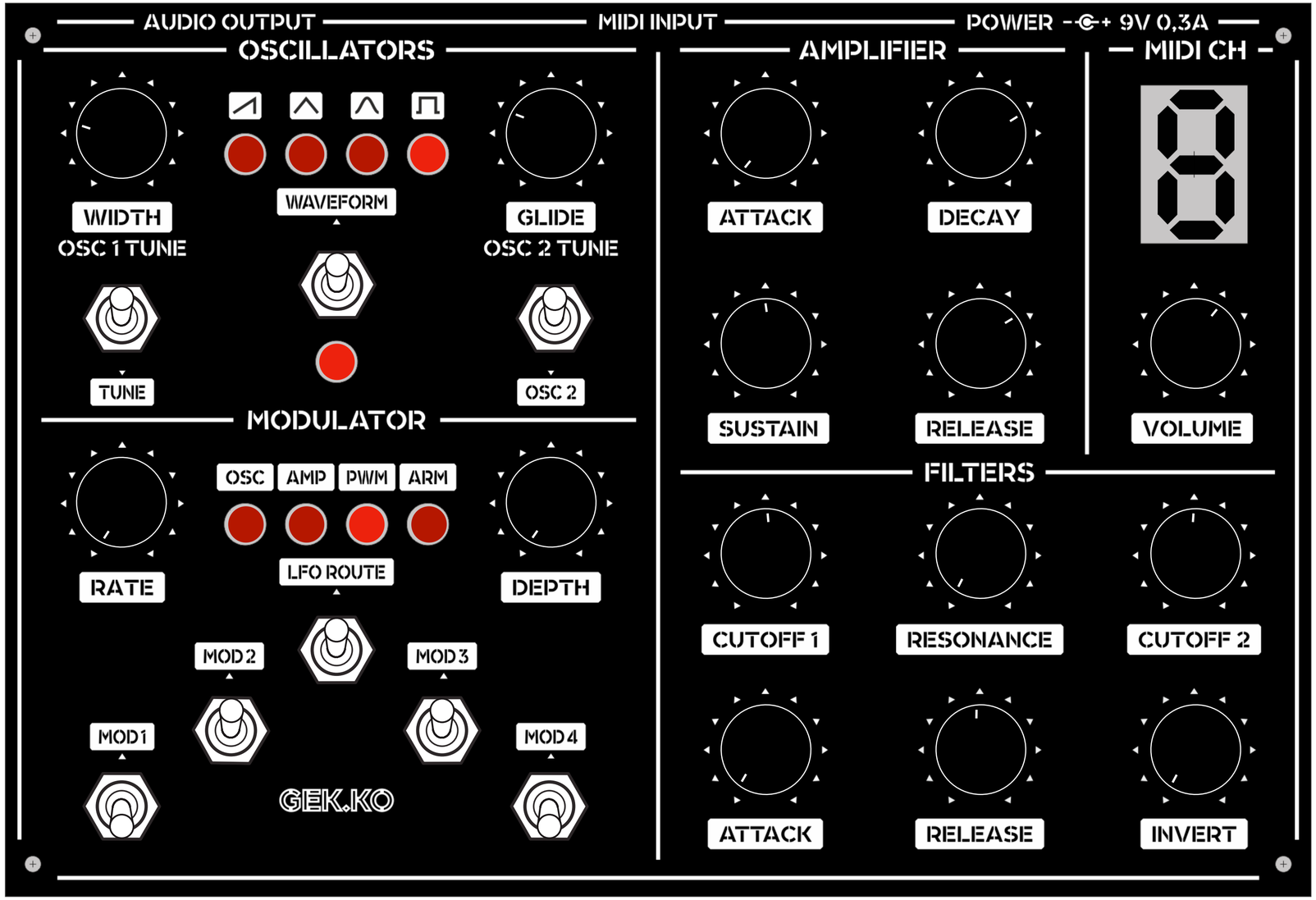

"Be Happy"

My Sounds

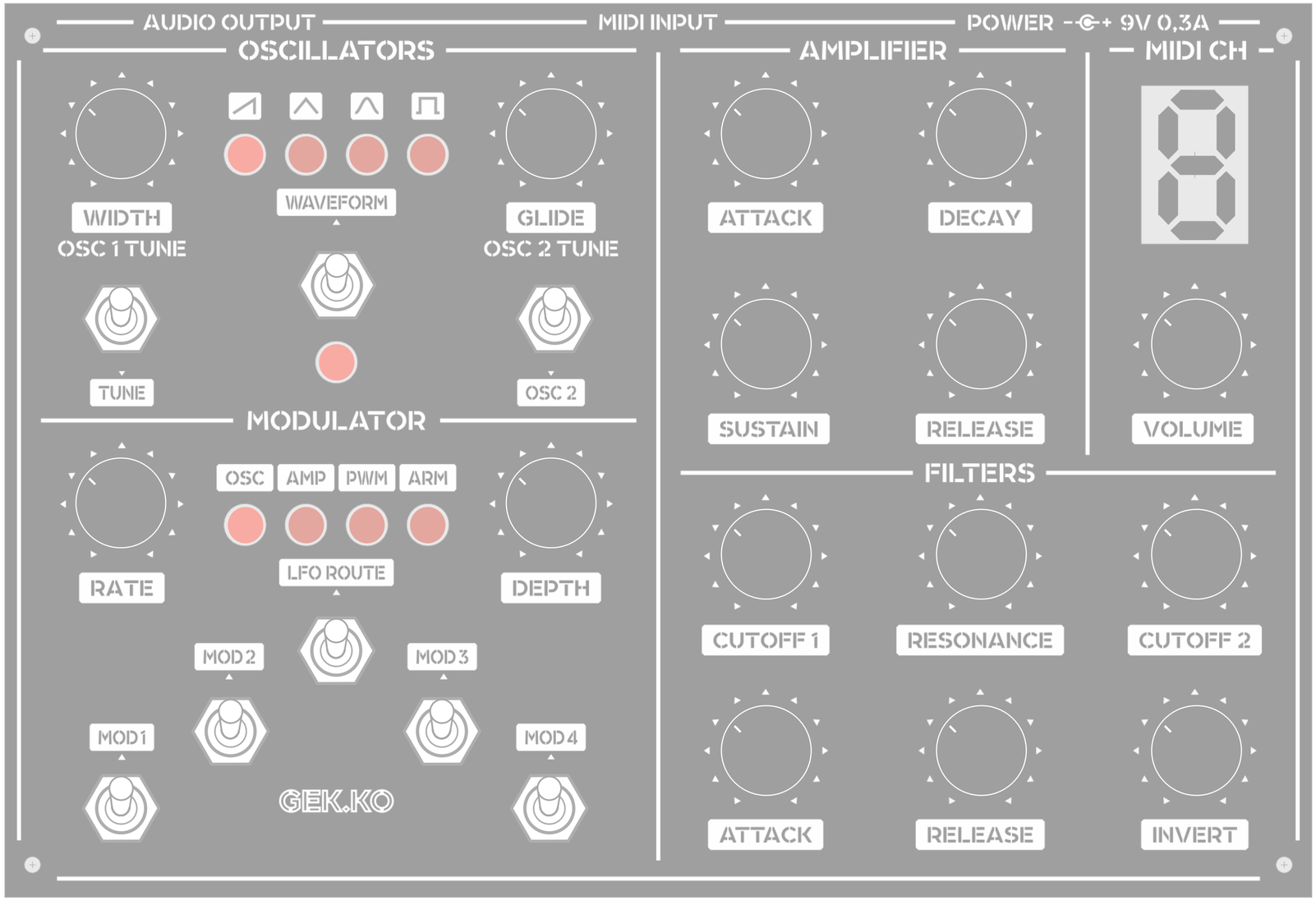

Print this drawing and mark the settings of the knobs and switches and create your own library of sounds. Give each of the sound a unique name! ;)

Safety

Following safety measures are a must:

- ***Use only the supplied power adaptor or the adaptor of equal power;***
- ***Do not spill water or any drinks on the synth;***
- ***Keep the synth away from opened fire or heat;***
- ***Avoid too long exposure to the direct sunlight;***
- ***Turn off the device during the storm;***
- ***Contact us in case of experiencing errors in workings.***

- ***Packagings: ABS Plastic***
- ***Panel: Aluminium***
- ***Size: 18 x 13 x 5 x 3***
- ***Weight: 600 g***

- ***Correct disposal: This product should be handed over to an authorised collecting site for recycling waste electrical and electronic equipment (EEE).***

Contact

For questions, contact:

info@modularmoon.com